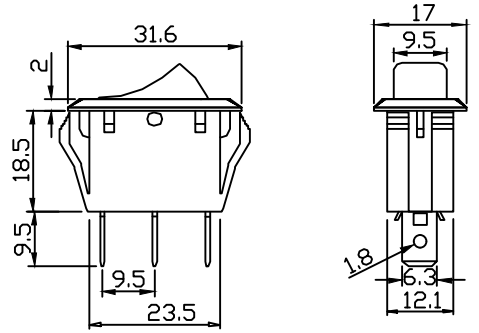

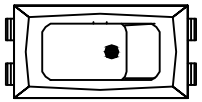

Cap Type

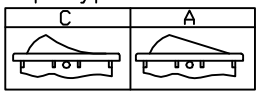

SWITCHING CIRCUIT

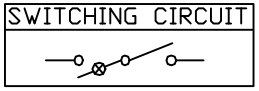

Panel Hole Size

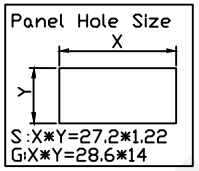

MATERIAL

1.Housing: Nylon 66
2.Rocker: PC & PA66
3.Contacts: Silver Alloy
4.Terminal: Brass Silver Plated
5.Lamp: Neon Lamp,Tungsten Lamp
6.Spring: SWP,SUS
7.Movable Arm: Brass Silver Plated

ELECTRICAL

1.Electrical Rating:10(4)A 250VAC T85
16(4)A 250VAC T125/55 1E4
15A 125V/7.5A 250AC
(H)Rating:20A 125VAC 3/4HP T105
2.Mechanical Life:Over 30000 Cycles
3.Electrical Life: Over 10000 Cycles
4.Contact Resistance:<20mΩ
5.Insulation Resistance:>1000MΩ
6.High Voltage Resistance:>1500V 1 min
7.Ambient Temperature:Terminal Side -20°C~+85°C;
Actuating Side -20°C~+55°C
8.Storage Temperature: -30°C~+80°C Max
9.Atmospheric Humidity: Max 85%
10.Actuating Force: 4~8N(Depends On Different Witch Function)
11.Flammability: UL94V-2
12.Temperature Rise At The Terminal: Max 30°C (Ul1054)
13.Solder Ability Of Terminal: Max 350°C 3S

ORDER INFORMATION

RHTGY05-11/N-C-2 RE/BK -P1 -S .....(2)

Series No

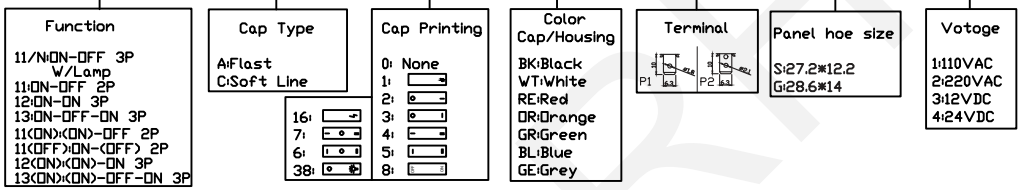

RHTECP NINGBO RHT ELECTRONIC CO.,LTD	UNITS:mm	SHEET SIZE: A4	SCALE:---	DRWN BY PAN	Rocker Switch Series
	0~3	3~18	18~50	50~120	CHK'D BY FENG
	±0.12	±0.15	±0.3	±0.5	APPR BY ZHAN
	THIRD ANGLE PROJECTION				RHTGY05